TAMPEREEN TEKNILLINEN YLIOPISTO
TAMPERE UNIVERSITY OF TECHNOLOGY

NIKO SALONEN

SIMULATIONS OF A COOLING WATER SYSTEM

Bachelor of Science Thesis

Examiner: Seppo Syrjälä

ABSTRACT

NIKO SALONEN: Simulations of a Cooling Water System
Tampere University of Technology
Bachelor of Science Thesis, 24 pages, 4 Appendix pages
02/2018
Bachelor's Degree Programme in Environmental and Energy Technology
Major: Energy and Process Technology
Examiner: Seppo Syrjälä

Keywords: cooling water system, process simulation

The thesis studied the cooling water system of a piston engine. The purpose of the study was to investigate the influence of pump installation on the functionality of a temperature control valve. The temperature control valve was connected with a feedback pipe. The temperature control valve and the feedback pipe are important components in the cooling water system. Their function is to control the temperature of the cooling water of the engine.

Computer software simulation was used as a research method. Four different cases were discovered in the study. The only changes between the cases were the pump installations. The first case was the reference case (Case A) and the second was the problem case (Case B). Third (Case C) and fourth case (Case D) were solution proposals for the observed issues in Case B. In Case A, the circulating pumps of the system were connected in parallel. In Case B, the circulating pumps were connected in series. In simulations, the closing position of the temperature control valve varied and the situations between different cases were compared.

The results show that the pump installation has a clear influence on the functionality of the temperature control valve. In Case A, the flow direction in the feedback pipe stayed in the right direction. The series connection of the circulating pumps in Case B caused the turning of the flow in the feedback pipe. Case C was a combination of Case A and B. The results of Case C showed that it worked better than the system of Case B. The results of Case D were more similar with Case A than the results of Case B or Case C.

CONTENTS

LIST OF SYMBOLS AND ABBREVIATIONS

34DF	Wärtsilä 34 Dual Fuel -engine
AFT	Applied Flow Technology Corporation
HT-circuit	high temperature cooling circuit
LT-circuit	low temperature cooling circuit
SI	in French: Système international d'unités, International System of Units
TCV	temperature control valve
A	area [m²]
C_v	valve flow coefficient (imperial unit) [-]
D	diameter [m]
f	friction factor [-]
g	standard gravity [m/s²]
H	pressure head [m]
h_l	loss head [m]
K	loss coefficient [-]
K_v	valve flow coefficient (SI-unit) [-]
L	length [m]
$\dot{m}$	mass rate [kg/s]
p	pressure [Pa]
Q	flow rate [m³/h]
Re	Reynolds number [-]
SG	specific gravity [-]
v	velocity [m/s]
ε	pipe roughness [m]
μ	dynamic viscosity [Pa·s]
ρ	density [kg/m³]

1. INTRODUCTION

We have many machines and systems in our world that need to be cooled. These systems and machines generate waste heat that must be removed. Usually, these machines are heat engines and good examples of these kind of systems are power plants and engines. The lack of cooling in these systems can cause system issues, so it is essential to have a cooling system that works properly.

This study explores the cooling water system of a reciprocating engine, which is also called a piston engine (in this thesis referred to as an engine). The need for this study came from real-life situations where system issues have been noticed. This thesis studies mainly the flow in the cooling water system.

The main objective is to study the influences of a pump installation on a functionality of a *temperature control valve (TCV).* TCV is connected with the inlet of a *feedback pipe.* The TCV-feedback pipe -pair controls the temperature of the cooling water that flows into the cooling parts of the engine. In certain circumstances, the flow in the feedback pipe can be disturbed, which can cause engine cooling issues. The thesis consists of two main parts, namely the theory part and a chapter on simulation. Simulation with a computer is easy and a cheaper way to research different situations than building a real system. The created simplified model simulates the cooling water system of a single engine. There are four different system configurations to be investigated. The model is same in every case but pump installations are different. The first one is the basic case (Case A) and the second is a Case B that could cause issues. Case C and Case D are solutions proposals. The different pump installation changes the pressure gradients in the system and cooling issues may occur.

The theory of the cooling water system and basics of fluid mechanics are presented in Chapter 2. The models and simulations are created by using *AFT Fathom 9.0* (referred to Fathom from now onwards) manufactured by Applied Flow Technology Corporation (AFT). The software and the model are introduced more detailed in Chapter 3. Simulation results and analysis are represented in Chapter 4.

2. THEORY OF COOLING WATER SYSTEM

The theory gives vital information about the behavior of the cooling water system. The primary function of the cooling water system is to cool another system that generates heat. The cooling water system is a pipe system with different components, and typical components of the system are pumps, valves and heat exchangers.

2.1 Overview of Cooling Water System

Wärtsilä 34DF –engine is a 4-stroke marine piston engine (Wärtsilä 2016, Ch. 1, pp. 1). The flow diagram of 34DF cooling water system is represented in Fig. 1. The system cools the engine (the green box "1." in Fig. 1) and the auxiliary components (the green box "2."). The engine cooling part has two separate cooling circuits, namely low temperature (LT) and high temperature (HT). The heat from the cooled parts is transferred to the cooling water and hence the waste heat needs to be removed from the water. The blue box in Fig. 1 highlights the central cooler of the system. The central cooler cools the circulating water which flows back from the engine and the auxiliary components. Function of "Sea water system" (dashed red line) is to circulate cooling sea water into the central cooler. In this study, it is not considered in the model.

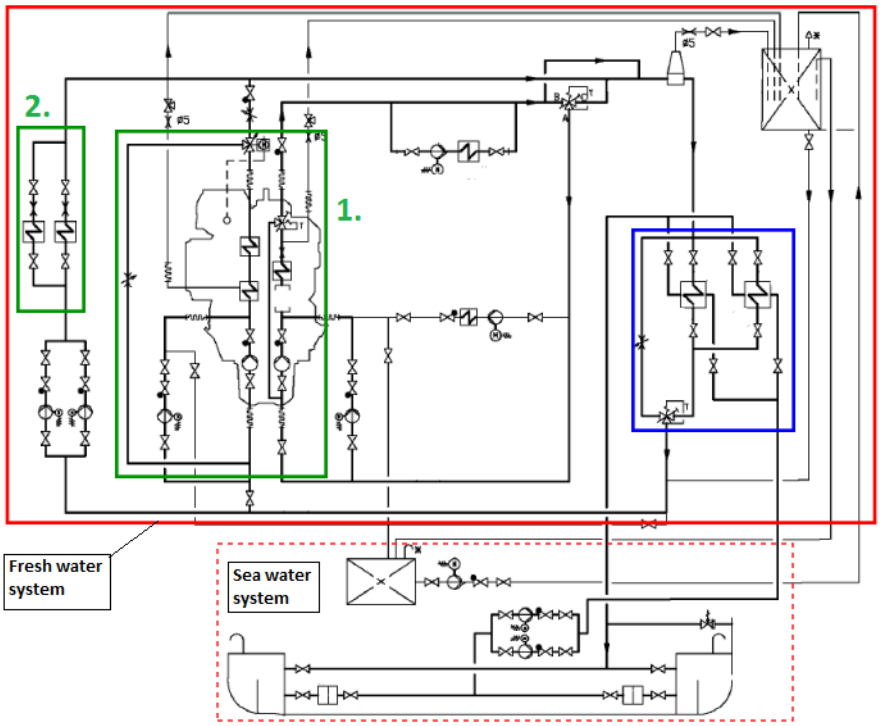

Figure 1. *Flow diagram of cooling water system of 34DF-engine (Wärtsilä 2016, Ch. 9, pp. 5)*

In this study, the area "Fresh water system" is highlighted with the red box is considered in the model. Additionally, to make the model more simplified, some components and pipes in the highlighted area are not modelled.

A special subject of interest is the feedback pipe whose inlet is connected with a TCV. The feedback pipe recirculates a portion of heated water back to the unheated water. Sometimes the cooling water system of the engine is used also for other application, for example, there could be another engine connected with the system. The modified system may need a different pump installation.

2.2 Basics of Fluid Mechanics

The two most important laws in fluid mechanics are the conservation laws of mass and energy. The conservation law of the mass is described by the continuity equation which is defined in Eq. (1).

$$\dot{m} = \rho v A = \rho Q = constant, \tag{1}$$

where $\dot{m}$ is the mass flow rate [kg/s], ρ is the fluid density [kg/m³], v is the mean velocity of the flowing fluid [m/s], A is the area perpendicular against the flow direction [m²], and Q $(= vA)$ is the (volumetric) flow rate of fluid.
A classical equation of fluid mechanics is Bernoulli's equation in Eq. (2).

$$p + \rho g z + \frac{\rho v^2}{2} = constant, \tag{2}$$

where p is the pressure and g is the standard gravity (Waite & Fine 2017). Equation (2) is valid when the fluid is incompressible, flow is steady and there are no losses. Bernoulli's equation states that energy is lossless in an ideal case. The unit of every term in the equation is the unit of the pressure [Pa]. The unit can be changed into meters by dividing Eq. (2) by ρ and g. To take into account the losses of an unideal system, the Eq. (2) for points 1 and 2 is Eq. (3).

$$\frac{p_1}{\rho_1 g} + z_1 + \frac{v_1^2}{2g} = \frac{p_2}{\rho_2 g} + z_2 + \frac{v_2^2}{2g} + h_{l,tot}, \tag{3}$$

where $h_{l,\,tot}$ is the sum of losses in the pipe system [m].
Each loss component can be calculated using Eq. (4).

$$h_{l,i} = K_i \frac{v_i^2}{2g}, \tag{4}$$

where K_i is the loss coefficient of component i [-], and v_i is the velocity at the component i (Shames 1992, pp. 368). The Equation (3) is valid when there is no heat transfer in or

out of the fluid. The major amount of the total losses come from the friction between the pipe and the fluid. When the flow is steady and fully developed, the *K*-factor for a round pipe is calculated using Eq. (5).

$$K = f\frac{L}{D}, \tag{5}$$

where *f* is the friction factor [-], *L* is the length [m], and *D* is the diameter of the pipe [m]. The friction factor can be calculated by using different equations (Shames 1992, pp. 360-361). The value of the friction factor depends on the type of flow. The type of the flow usually depends on Reynolds number in Eq. (6).

$$Re = \frac{\rho u D}{\mu}, \tag{6}$$

where μ is the dynamic viscosity of the fluid [Pa·s] (White 2014). Flow types, Reynolds numbers and the friction factor correlations are presented in Table 1. The border limits of Reynolds number are not unambiguous and, for example, Shames (1992, pp. 348) states that for laminar the value of *Re* is below 2300. The friction factor equation for transitional and turbulent flow is known as Colebrook (also known as Colebrook-White) formula, where ε is the roughness of a pipe [m] (Shames 1992, pp. 362-364).

Table 1. *Reynolds number limits and friction factor correlations for laminar, transitional and turbulent flows. Reynolds numbers are defined by White (2014).*

Flow Type	Reynolds Number	Friction factor
Laminar	< 2000	$f = \frac{64}{Re}$
Transitional	2000 – 3000	$\frac{1}{\sqrt{f}} = 1.14 - 2.0\log_{10}\left[\frac{\varepsilon}{D} + \frac{9.35}{Re\sqrt{f}}\right]$
Turbulent	> 3000	

Considering the same system with the same properties but with different flow rates marked by Q_n and Q_x. Solving pressure drop (unit Pa) ratio by using Eq. (4) gives Eq. (7).

$$\frac{\Delta p_x}{\Delta p_n} = \frac{\left(K\frac{\rho v_x^2}{2}\right)}{\left(K\frac{\rho v_n^2}{2}\right)} = \left(\frac{v_x}{v_n}\right)^2 = \left(\frac{Q_x}{Q_n}\right)^2. \tag{7}$$

In Eq. (7) the *K*-factor is assumed to stay constant. In reality, the value of *K*-factor depends on the friction factor which changes when the velocity of the flow changes. When

the value of the pressure drop of some flow rate is known, the unknown pressure drop of a component with any flow rate can be calculated by using Eq. (7).

Two basic rules of a pipe system are pressure drops and flow rates in branching parallel pipes. Considering the parallel pipe network system in Fig. 2.

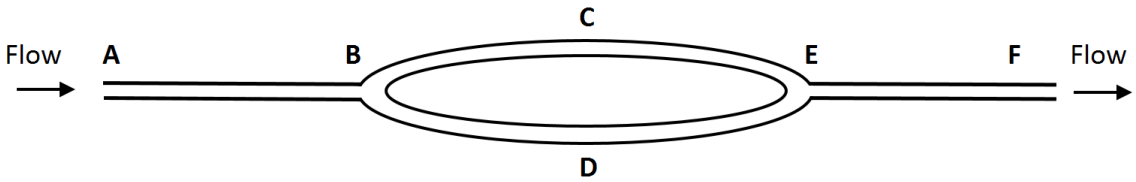

Figure 2. *Branching parallel pipes BCE and BDE (adapted from Giles et al. 2014, Figure 9-1).*

The upper pipe is pipe BCE and pipe BDE is the lower pipe. The flowing fluid is water so it is incompressible. Because of conservation of mass, the flow rates at point B and E must be equal. At point B, the pressure is P_B and at point E the pressure is P_E. Thus, the pressure drops in pipes BCE and BDE must be equal.

2.3 Water Pumps

A pump is a machine that causes fluid to flow due to the motion of pistons, rotation of vanes or rotation of an impeller (Atkins & Escudier 2013). The most common pump type is a centrifugal pump (Girdhar et al. 2005, pp. 10). It gives kinetic energy for the fluid and converts it to pressure energy according to the Bernoulli's law (Girdhar et al. 2005, pp. 4).

Two of the most important characteristic quantities of the pump are capacity Q and differential head H. The capacity is the flow rate through the pump and its unit is usually m^3/h. The head denotes pressure change over the pump and its unit can be in meters or in pressure units. The pressure unit can be converted to meter unit by using the equation of hydrostatic pressure Eq. (8).

$$H = \frac{p}{\rho g}, \tag{8}$$

where H is the pressure head [m]. (Girdhar et al. 2005, pp. 50)

The flow through the centrifugal pump decreases when the differential head increases (Girdhar et al. 2005, pp. 90). Pump curve describes head-flow -dependency (H-Q) of the pump. Two typical pump curves are represented in Fig. 3. For centrifugal pumps, the typical curve is descending as in the Fig. 3 (Girdhar et al. 2005, pp. 54).

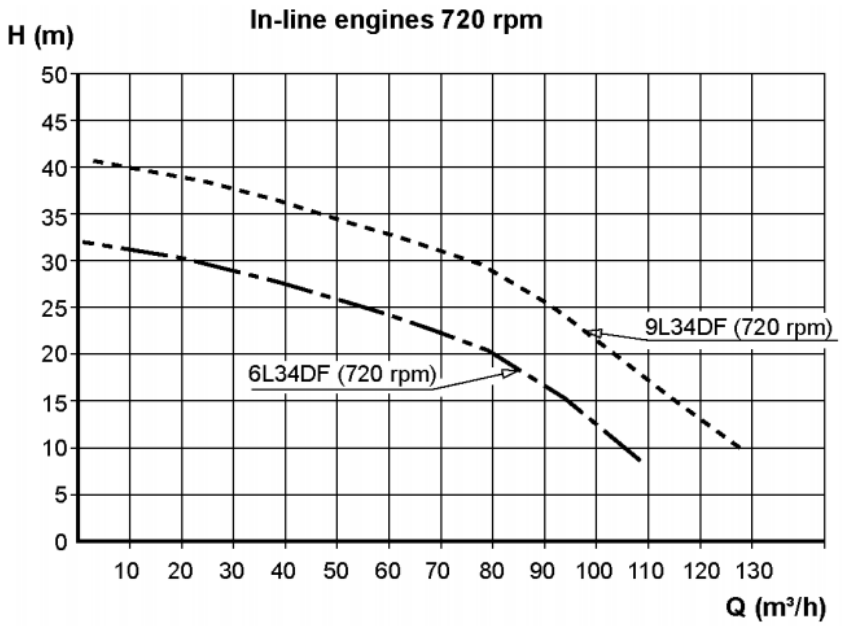

Figure 3. *Pump curves for two different pumps of Wärtsilä 34 DF -engine (Wärtsilä 2016, Ch. 9, pp. 4).*

The duty point of the pump is the intersection point between the pump curve and system curve (Schaschke 2014). The duty point is illustrated in Fig. 4.

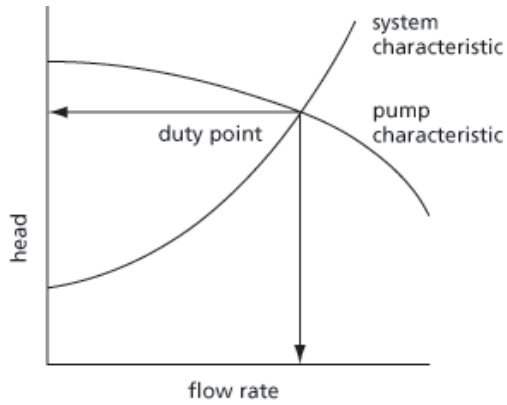

Figure 4. *Pump curve and system curve sketched in H-Q-diagram. The duty point is the intersection point of the curves. (Schaschke 2014)*

2.4 Temperature Control Valves (TCVs)

Temperature control valve (TCV) is a three-way valve. Its function is to control temperature(s) in outlet pipe(s) of the valve. TCV has two main installation applications, namely mixing and diverting flows, and these applications are shown in Fig. 5. In this study, self-acting and electrically controlled valves are treated. (AMOT 2017a, pp. 3)

A very important setting of TCV is temperature a set point. The set point is the wanted temperature of the fluid at some point of the system.

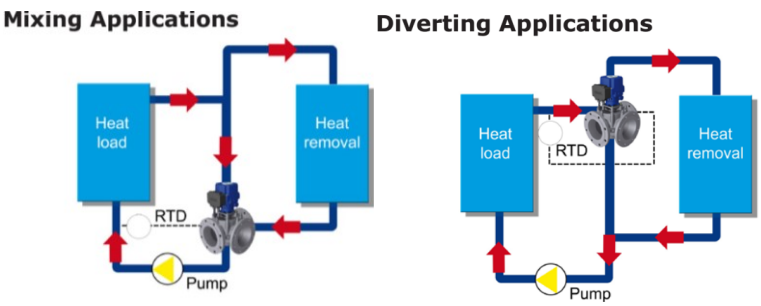

Figure 5. *Two main installations for TCV. The mixing application mixes two incoming flow to one and the diverting application separates one flow into two flows. (AMOT 2017a, pp. 3)*

The self-acting TCV is also called as wax-type TCV. This TCV does not need any external actuator or power to control the temperature. In the self-acting TCV, there is a thermostatic element that expands when temperature increases and shrinks when temperature decreases. A self-acting valve is cheaper than an electrically actuated because it does not need any external devices to work properly. The drawback of using a self-acting TCV is that the moderation of the set point after the TCV has been manufactured is more complicated than electrically actuated TCV. (AMOT 2017b, pp. 1-3)

Electrically actuated TCV needs a temperature sensor that measures the temperature. It also needs an electric motor that works as an actuator. The sensor and measurement system send signals to the motor which controls the direction of TCV (AMOT 2017a, pp. 4). The sensor needs to be installed far enough from the TCV so that the water flows are well mixed. Electric TCV is more expensive than a self-actuated one but its set point can be changed during use.

Pressure drop (in bars) over TCV can be calculated by using Eq. (9).

$$\Delta p = \frac{Q^2 SG}{K_v}, \tag{9}$$

where Q is flow rate [m³/h], K_v is valve flow coefficient [-], and SG is specific gravity of the fluid [-] (Zhou et al. 2017).
The specific gravity of the fluid is defined in Eq. (10).

$$SG = \frac{\rho_{fluid}}{\rho_{H_2O}}, \tag{10}$$

where ρ_{fluid} and ρ_{H2O} are the densities of the fluid and water (LaNasa & Upp 2014, pp. 224). In the cooling water system, the flowing fluid is fresh water and it is expected to be an incompressible fluid so for it the value of SG is 1. The K_v coefficient is calculated by using SI-units, and C_v is the flow coefficient when using imperial units (Q is in US gal/min and Δp in psi) (Zhou et al. 2017).

3. MODELING AND SIMULATION

In this chapter, the simulation software and the built model are introduced. Applied Flow Technologies (AFT) manufactures different fluid flow analysis software (AFT 2017a). AFT Fathom is a system for analyzing incompressible fluid flow in piping network (AFT 2015, pp. 1).

3.1 Introducing the Software – AFT Fathom

AFT Fathom software can model and analyze open or closed systems. It can analyze flow and heat transfer between the system and the environment. The software uses *Newton-Raphson technique* to solve the flow problem of a model. (AFT 2015, pp. 2-3)

Fathom iterates Eq. (1) and (3) to analyze the flow of the system. If the heat transfer is chosen to be analyzed, Fathom also uses the energy equation. (AFT 2017b, pp. 20) The friction factor of a pipe is calculated using friction factor correlations presented in Table 2. In Fathom, the upper limit of Reynolds number for laminar flow is 2300. When Reynolds number is higher than 4000, the Colebrook equation is used for calculation of the friction factor. (AFT 2017b, pp. 46)

3.2 Case Setting

The original system is named as Case A and its flow diagram is presented in Fig. 6. Legends of flow diagram components are shown in Table 2. Similar components have the same letter code and they are numbered fluently.

Table 2. *Explanations of the legends in flow diagrams.*

Legend	Explanation
TV	Temperature control valve
LV	Heat exchanger
P	Pump
T	Tank

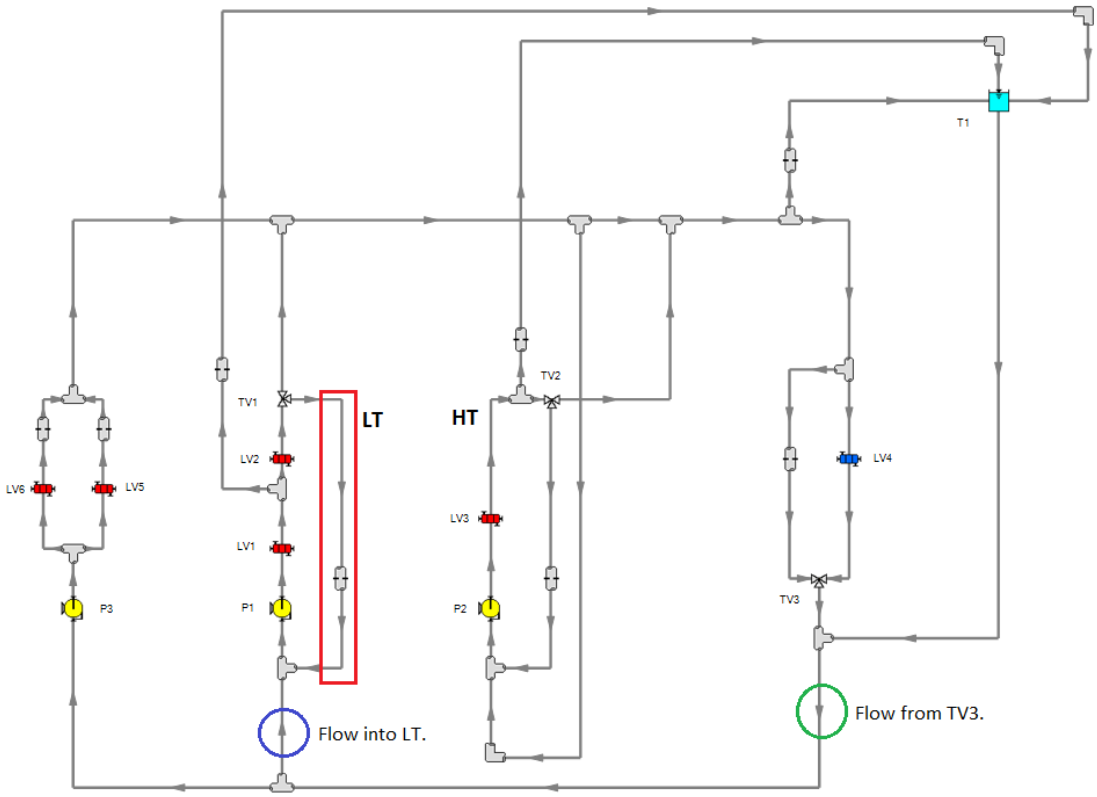

Figure 6. *Flow diagram of Case A. This is a simplified system of the cooling water system of the vessel with the single 34DF main engine. The diagram is created by using AFT Fathom.*

In Figure 6, the two cooling water circuits (LT and HT) of the engine are marked. Each circuit consists of the circulating pump (P1 or P2), heat exchangers and TCV (TV1 or TV2). The feedback pipe of LT branch is rounded with red.

In simulations, the closing percent (in the upward direction) of TV1 varies from 0% to 100%. The closing percent changes the flow resistance and it has an influence on the flow behavior in the feedback pipe of LT-circuit. In every case, the flow rates are measured from 3 points: feedback pipe, flow into LT (blue mark), and flow from TV3 (green mark). In Case A, the circulating pumps P1 and P3 are connected in parallel. The system is assumed to work properly, and the flow direction in the marked feedback pipe is downwards with any closing-% of TV1. The flow rate in the feedback pipe should increase towards the inlet of pump P1 when the closing-% of TV1 increases.

In Case B, system issues may occur in certain circumstances, and its flow diagram is in Fig. 7. In the figure, the feedback pipe of LT-cycle is highlighted with the red box and the location of pump 3 (P3) is highlighted with the blue box. The difference to Case A is the type and location of P3. The circulating pumps P1 and P3 are now connected in series. The nominal flow rate of P3 is higher than in Case A (see Table 3 on page 12). Also, the

pipe from the expansion tank (green box, item T1) is connected to the suction piping of pump P3.

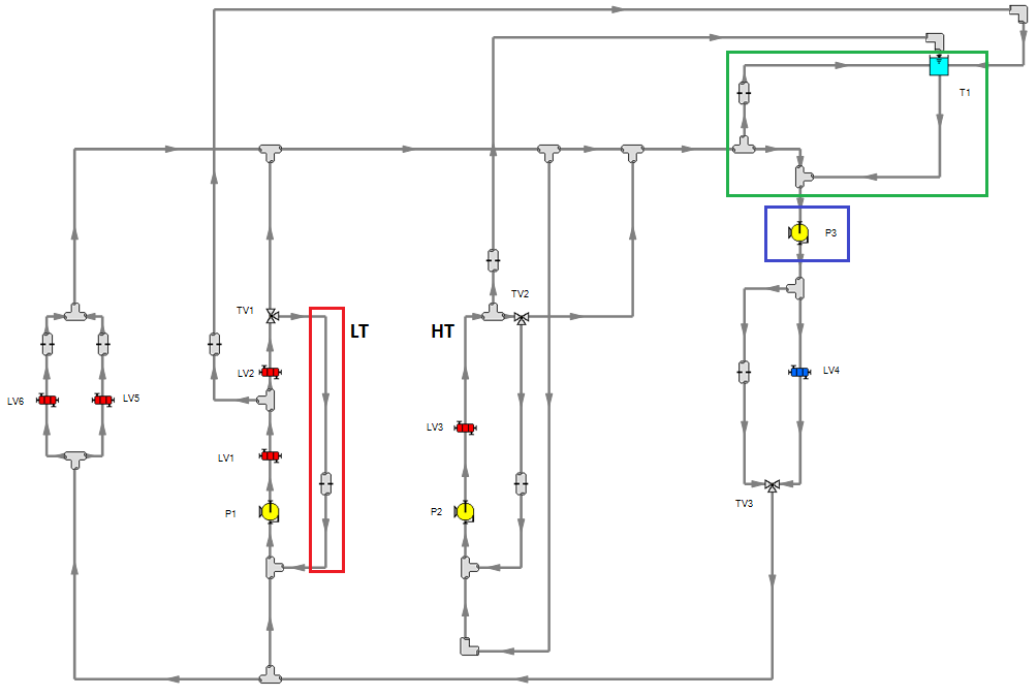

Figure 7. *Flow diagram of Case B.*

In Case B, circulating pumps P1 and P3 are connected in series, so the pressure before P1 is higher than in Case A. When the closing-% of TV1 is small, the flow resistance upwards is also small. Thus, the pressure level before TV1 is smaller than the pressure level before P1, and the flow direction in the feedback pipe is opposite from the bottom upwards. When the closing-% increases enough, the resistance increases and the direction of flow is supposed to turn to the right direction in the feedback pipe.

HT-circuit has also its own feedback pipe in every case. However, it is assumed that the flow is more stable in the feedback pipe of HT-circuit than in LT-circuit. The reasons for different flow behavior in the feedback pipes are also studied in simulations.

3.3 Modeling the System

To get correct simulation results, the system must be defined precisely enough. A wrong type of model and incorrect parameters of the components could give incorrect simulation results. The system is quite complex to model so it is built step-by-step from a simple model to a more complex model. A building process of the model is divided into three steps:

1. The main circuit without heat transfer having an infinite expansion tank without air vent pipes.

2. The main circuit with heat transfer having an infinite expansion tank with air vent pipes.
3. The main circuit with heat transfer having a finite expansion tank with air vent pipes.

The water surface in the expansion tank is 10 meters above the other components which are located at zero level. In reality, these components are at different height levels but in this simulation these levels are simplified to be the same. To make the system more realistic, there are some additional valves and bends in the pipes but these are not shown in the flow diagrams. The list of additional valves and bends is in Appendix 2. The orifices locating near TV2 and TV3 are balanced, so that the flow rates in the parallel pipe connected with the TCV and through the orifice are same.

The pipe lengths and sizes for Case A are presented in Appendix 1. These dimensions are mainly the same in Case B. The roughness of every pipe is 0.05 mm. The pump curves of P1, P2 and P3 are in Appendix 3. The nominal duty points of the pumps and the resistance values of the other main components are shown in Table 3.

Table 3. *Characteristic values of certain components.*

Temperature Control Valves	**Kv**	**Closing-%**
TV1	207	-
TV2	176	50
TV3	263	50
Heat Exchangers	**Nominal Flow [m³/h]**	**Nominal Head Loss [m]**
LV1	75	6
LV2	75	5
LV3	75	11
LV4	110	6
LV5	25	10
LV6	10	1
Pumps	**Nominal Flow [m³/h]**	**Nominal Head [m]**
P1	75	27
P2	75	27
P3: Case A	35	22
P3: Case B	110	22

The resistance curve of a heat exchanger can be calculated using Eq. (9) when the pressure drop of the heat exchanger is known at certain flow rate.

For the temperature control valve, the sum of closing percent is always 100%. For example, when the closing-% of TV1 in upward direction is 70%, the closing-% in the direction of the feedback pipe is 30%. The closing-% of TV2 and TV3 remain constants in simulations.

4. RESULTS AND ANALYSIS

In this Chapter, the simulation results are presented and analyzed. Results for Case A and Case B are in Ch. 4.1. In Ch. 4.2, a solution proposal and its results are presented.

4.1 Results

For each case, the flow rates in three different pipes are shown as function of closing-% of TV1 (in upward direction). The locations of the measured pipes are shown in Fig. 8. The green box is the flow rate that comes from TV3 and the blue circle is the flow rate that is flowing into LT-circuit.

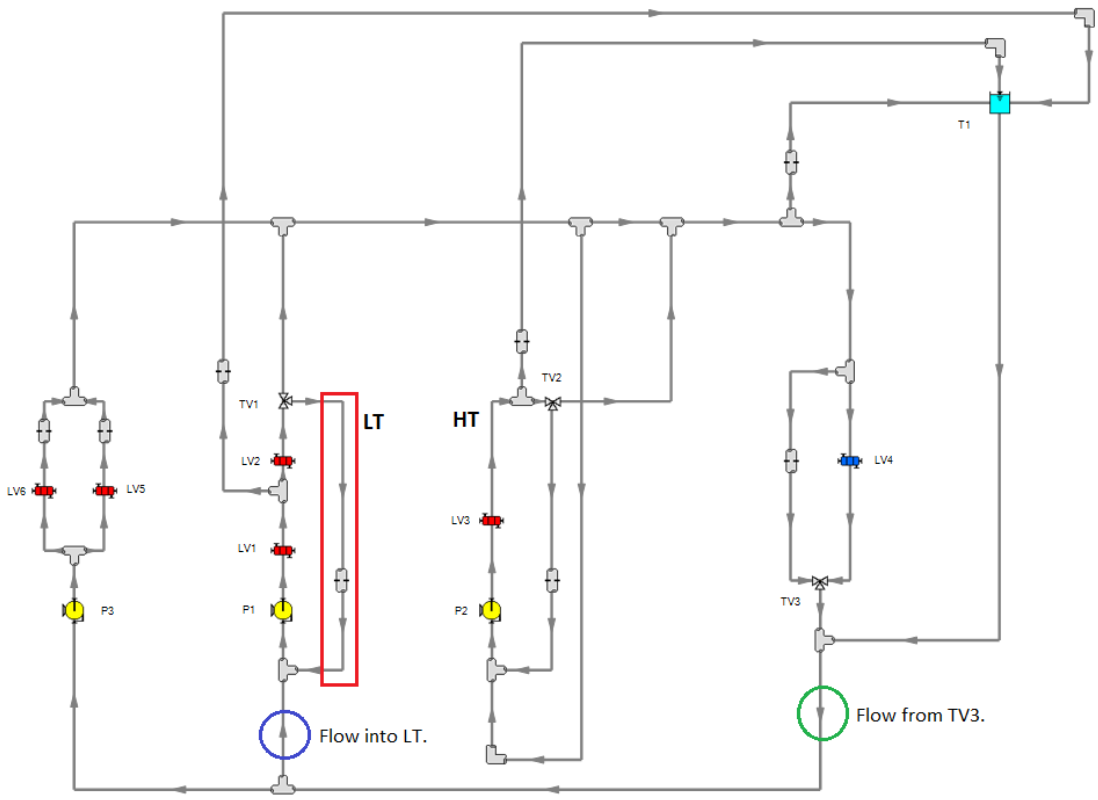

Figure 8. *Measurement points of the flow rates.*

The simulation results are shown in Fig. 9 and Fig. 10 for both cases. The red line is the flow rate in the feedback pipe, the blue line is the flow rate into LT-circuit, and the green line is the flow rate from TV3.

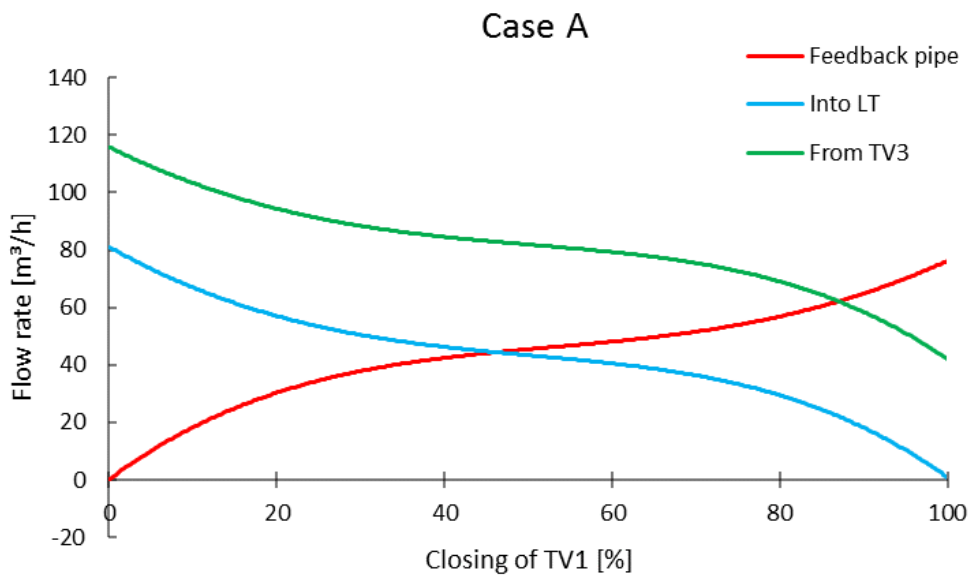

Figure 9. *Case A, flow rates in different parts of the system.*

In Case A, the flow rate in the feedback pipe increases when the Closing-% of TV1 increases. The flow rate is 0 m³/h, when TV1 is fully open, and when TV1 is fully closed, the flow rate is approximately 75 m³/h. The flow rates from TV3 and into LT decrease when the closing-% of TV1 increases.

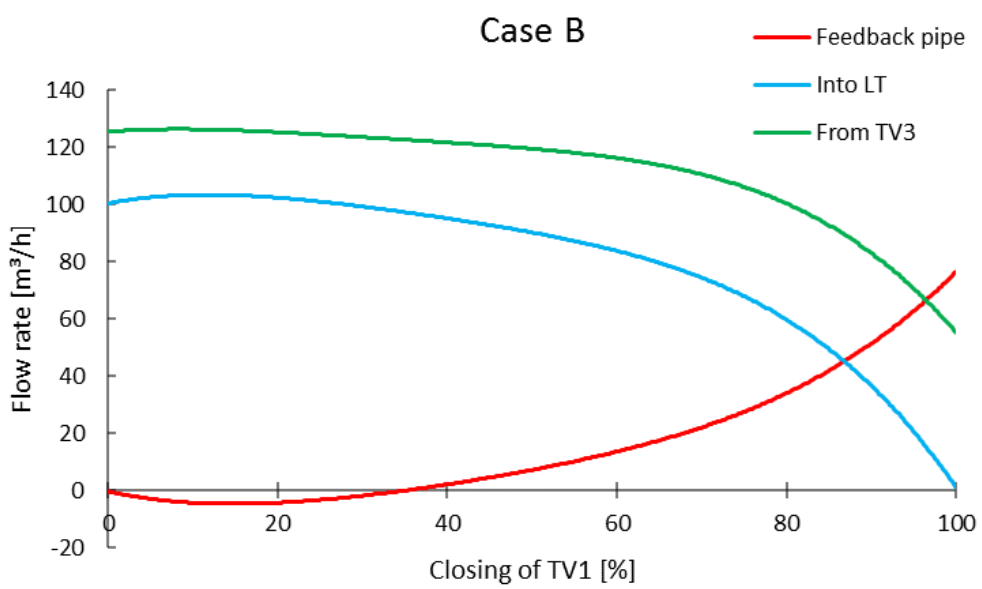

Figure 10. *Case B flow rates in different parts of the system.*

In Case B, the flow rates are remarkably different than in Case A. While the feedback pipe flow rate is negative, the flow rates from TV3 and into LT stay almost constant. The results of Case B show that the flow in the feedback pipe will turn when the closing percent of TV1 is approximately from 40% to 50%. When the flow rate in the feedback

pipe is positive, it increases rapidly with increasing closing percent. Flow rates into LT and from TV3 drop also more rapidly than in Case A. The flow rates are higher in Case B than in Case A because of the changed system curve. The pump curve of P1 versus system curves are represented in Appendix 4. The curve of P1 is the same in both cases but the system curve changes because of the repositioned P3. The repositioned P3 lowers the resistance of the system and the flow rate of the duty point of P1 in Case B is higher than in Case A.

The direction of the flow in the feedback pipe is determined by the fluid stagnation pressures in the inlet and the outlet of the pipe. The fluid flows from the higher pressure towards the lower pressure. While the system works properly, the pressure in the connection point of TV1 and the feedback pipe is higher than the pressure in the outlet (just before P1) of the feedback pipe. If the pressures are the opposite, the flow is also the opposite.

Stagnation pressures in the pipe outlets of Case A are presented in Fig. 11. The closing-% of TV1 is 20%. The pressure at the outlet of the feedback pipe is lower than at the inlet connection with TV1. Thus, the flow is from up downwards. According to Wärtsilä (2016), the maximum gauge pressure after P1 or P2 is 530 kPa. The stagnation pressure is the sum of the gauge pressure and the atmospheric pressure (1 bar), so the maximum stagnation pressure after P1 or P2 is 630 kPa. In Case A, the pressures after P1 or P2 are below the limit with every closing-% of TV1.

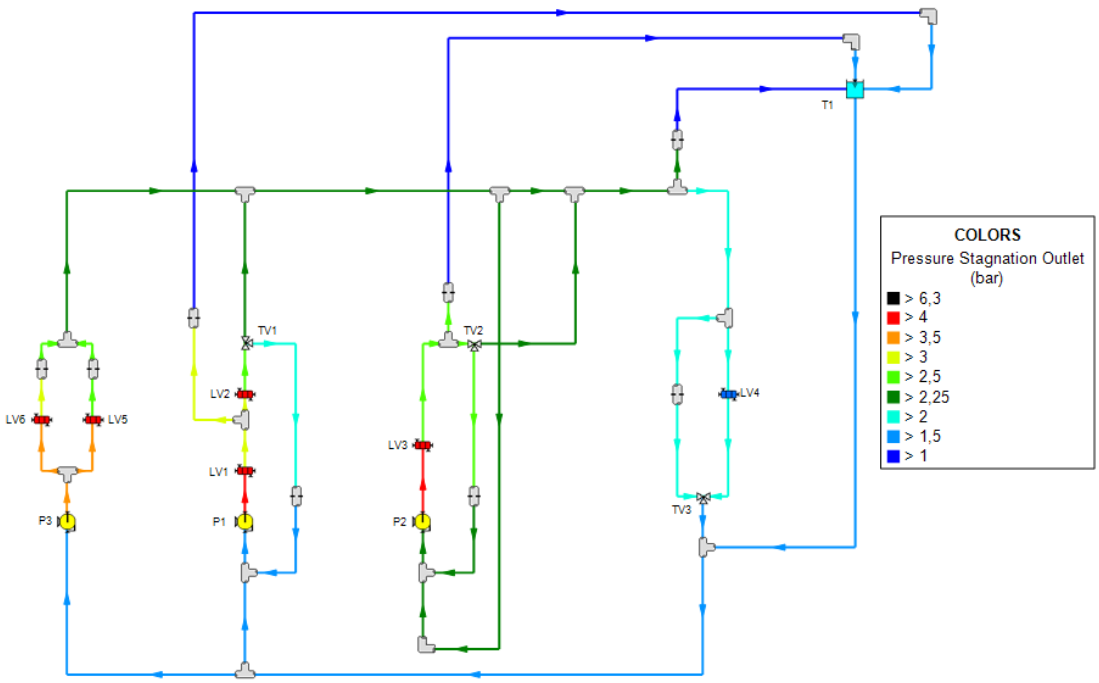

Figure 11. *Stagnation pressures in pipe outlet of Case A when closing of TV1 is 20%. The decimal separator in the definition box is a comma.*

In Case B, the repositioned P3 creates pressure on the water that is flowing towards P1 and the auxiliary coolers. The stagnation pressures of pipe outlets are presented in Fig. 11. The closing-% of TV1 is 20 %. When the closing-% of TV1 is from 90% to 100%, the pressure after P1 is above the recommended maximum stagnation pressure (630 kPa).

The pressure drops in engine branch and auxiliary cooler branch are equal according to the flow rules of parallel pipes considered in Chapter 2.2. The pressure at the inlet of P1 is relatively high, so the significance of pressure rise in P1 is not so high than in Case A. However, the pressure drops of LV1 and LV2 are approximately same in Case A and B. According to the results in Fig. 10 (p. 14), the flow direction in the feedback pipe is from down upwards. Figure 12 shows that the pressure difference between the inlet and outlet is under 0.5 bar, so the flow direction in the feedback pipe is turned upwards.

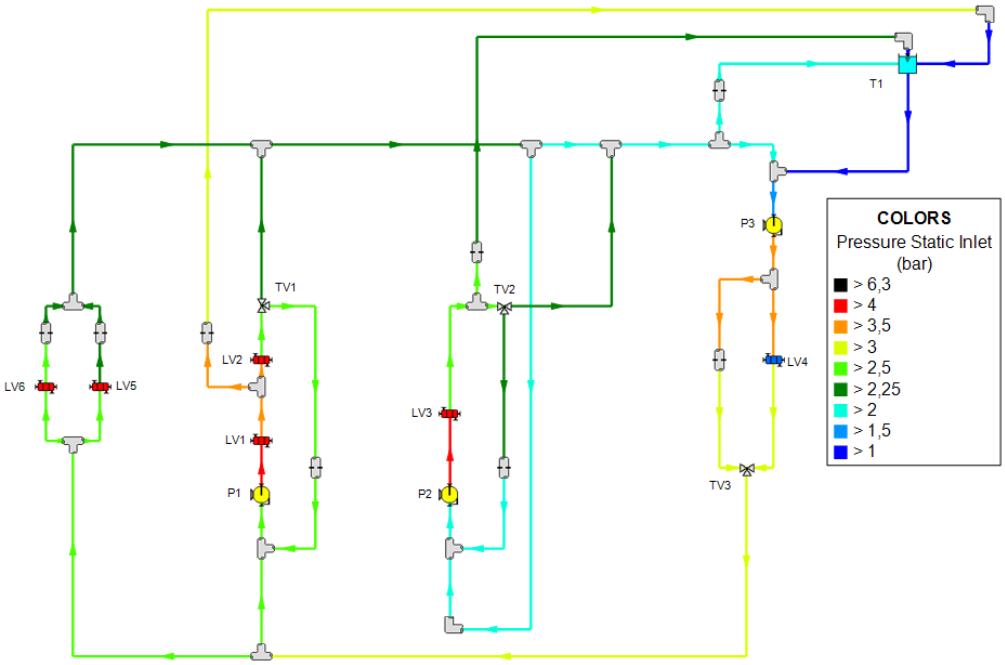

***Figure 12**. Stagnation pressures in pipe outlets in Case B.*

According to the parallel branching pipe -theory in Ch. 2.2, the pressure drop in LT-circuit is the same than in the auxiliary cooler branch. When TV1 is open its pressure drop is small and most of the total pressure drop in LT-circuit generates in LV1 and LV2. Thus, the pressure in TV1 is lower than the pressure in the inlet of P1 and the flow is upwards in the feedback pipe of LT-circuit. When TV1 closing-% increases enough, the pressure drop in TV1 increases and the flow in feedback pipe turns downwards.

The HT-circuit of the system has also same kind of feedback than the investigated LT-circuit. Although the flow direction in this feedback stays from up to downwards in every case. The closing-% of TV2 has no effect on the flow direction. The HT-circuit is parallel

with the short pipe marked in Fig. 12. The pressure drop in the short pipe is negligible at given flow rate in the system. Because of the small pressure drop, the pressure in the parallel piping is higher than the pressure in the inlet of P2. Thus, the flow direction in the feedback pipe of HT-circuit is downwards. Turning of the flow to the opposite direction is possible by adding the pressure drop in the parallel pipe. This is could be executed by adding an orifice in the parallel pipe.

4.2 Solution Proposals and Discussion

A solution for the problem could be to replace P3 of Case B by a constant pressure pump (green box in Fig. 13). A sketch of solution proposal (Case C) is represented in Fig. 13. The constant pressure pump (green box in Fig. 12) creates a constant pressure head rise (15 m in this simulation) with any flow rate. The location of pump 3 (P3) is the same as in Case A (blue box). Now, the circulating pumps P1 and P3 are in parallel and both are connected in series with the constant pressure pump. This solution could make it possible to have a pump before the central cooler as in Case B, but the system would work as in Case A.

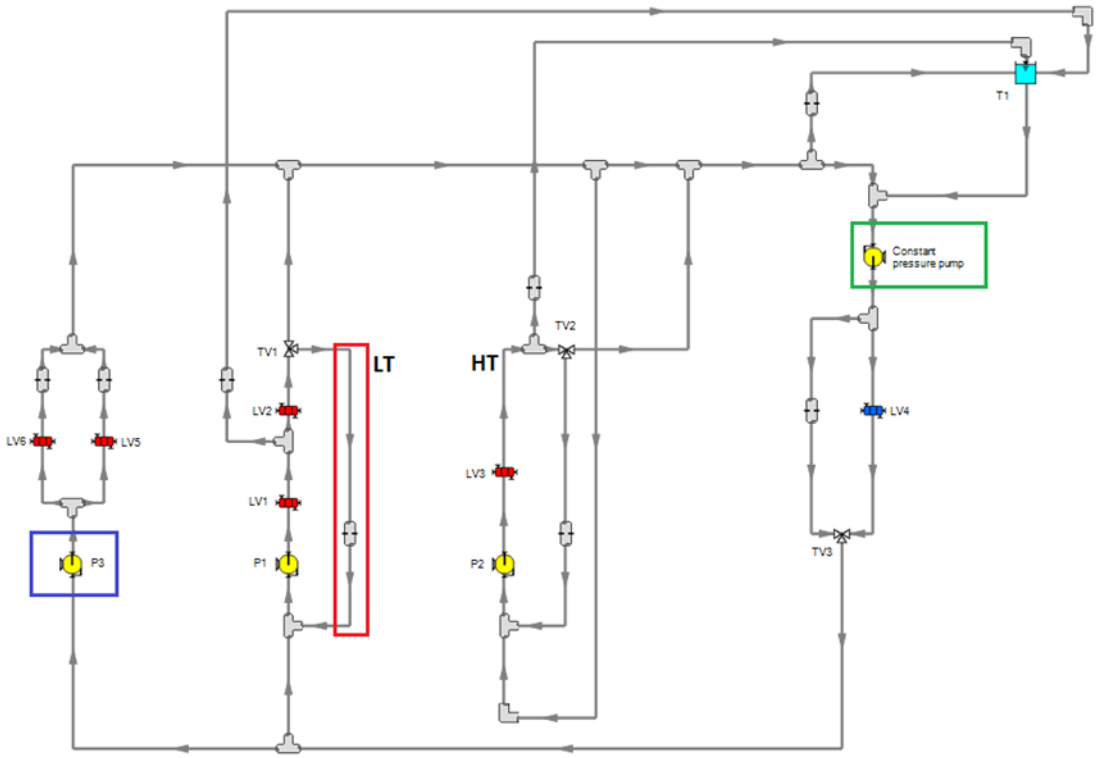

Figure 13. *Sketch of Case C. Constant pressure pump is installed just before LV4.*

The simulation results of solution proposal are shown in Fig. 14.

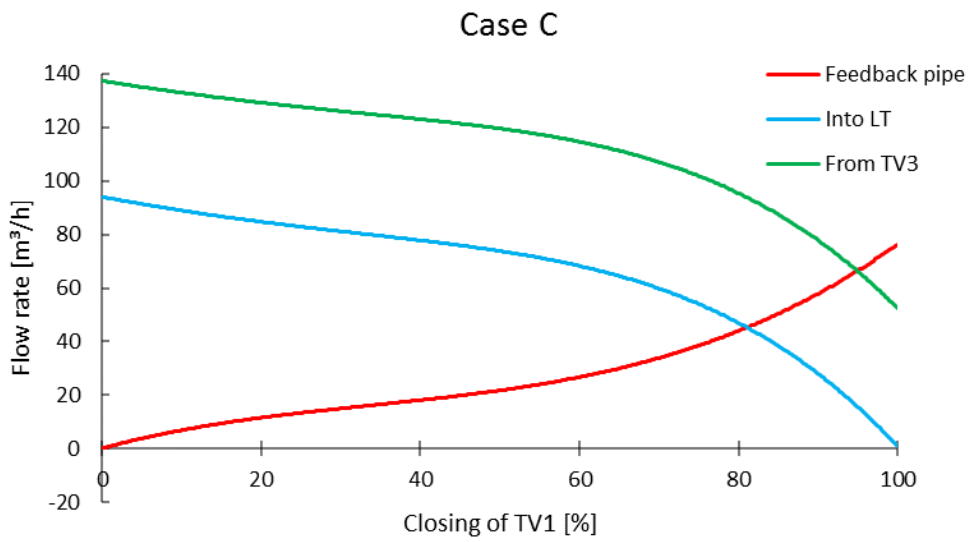

Figure 14. *Case C flow rates in different parts of the system.*

The flow rate in the feedback pipe increases slowly when the closing of TV1 is below 40%. The flow rate in feedback pipe rises faster when the closing is 60% or higher. The flow rate is approximately 80 m³/h when TV1 is full closed. The Results of Case C shows that the solution proposal works better than Case B. The flow rates from TV3 and into LT are bigger than in Case A, because of flow rate in the feedback pipe increases slower than in Case A. Figure 15 shows stagnation pressures of Case C when the closing-% of TV1 is 20%. In Case C, the stagnation pressure after P1 is always under the recommended limit 630 kPa.

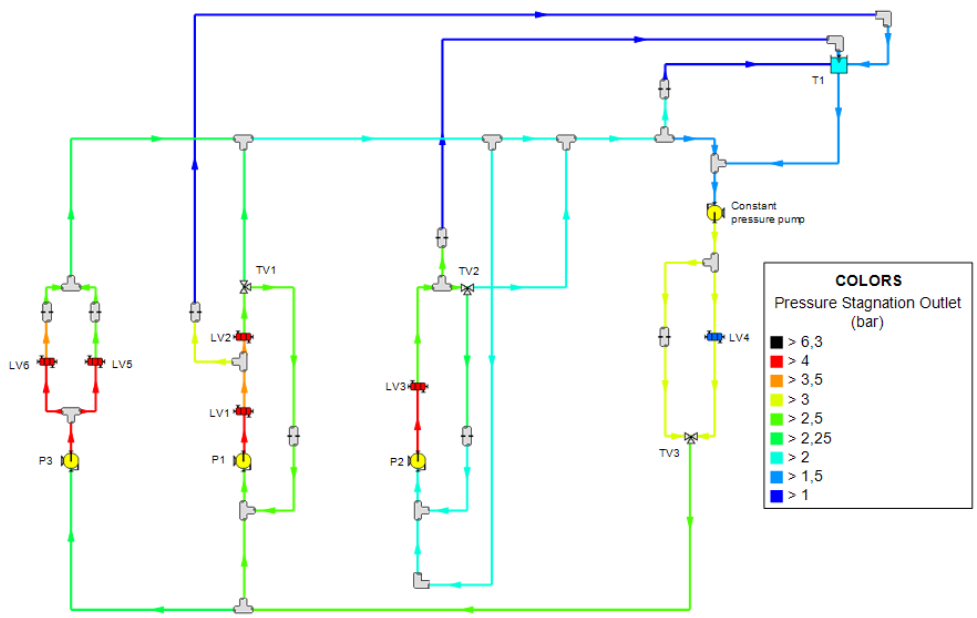

Figure 15. *Stagnation pressures in pipe outlets in Case C.*

In Case C, pump P3 creates higher pressure rise in the auxiliary cooler branch. Pump P3 reduces the total pressure drop in the auxiliary cooler branch. The pressure in TV1 is

higher than the pressure in the inlet of P1 and the direction of the flow in the feedback pipe is downwards with every closing-% of TV1. Because of the series connection with the constant pressure pump and P1 or P3, the head rise of the constant pressure pump does not need to be so high than the head rise of P3 in Case B. Thus, the pressure in the inlet of P1 is lower than in Case B.

According to simulations, the flow rates are much higher in Case C than in Case A and the flow direction in the feedback of LT-circuit turns upwards when the head of the constant pressure pump is higher than 20 m. This maximum limit depends on the pressure drop of the piping between the constant pressure pump and pump P1. If the pressure drop is higher, the maximum limit is also higher. For example, when the nominal pressure drop of LV4 is 150 kPa with the nominal flow rate of 110 m^3/h and flow rate through parallel the pipe is 0 m^3/h, the maximum value is approximately 44 m. The higher pressure drop lowers the pressure in the inlet of P1 and the head rise in the constant pressure pump can be higher.

The smaller the head rise of the constant pressure pump, the more same the system behavior is in Case C than in Case A. This same phenomenon occurs if the pressure drop rises in the piping between the constant pressure pump and P1.

The flow rate is higher in Case C than in Case A because of the same reason as in Case B. In Case C, the constant pressure pump lowers the resistance of the system. The curve of P1 versus system curves are represented in Appendix 4. The flow rate could be adjusted by adding the pressure drop between the constant pressure pump and P1. However, the same method works with Case B and the regulation of the pressure drop should be continuous because of changing closing-% of TV1.

A solution for the continuous regulation could be to install a *pressure control valve* before the outlet of the feedback pipe. The pressure control valve controls the pressure of the flow. According to simulations, the pressure control valve could be a solution for Case B and Case C. In Case B, the flow in the feedback pipe stays in the correct direction when the pressure control valve is installed. This case is named as Case D and its flow diagram is in Fig. 16.

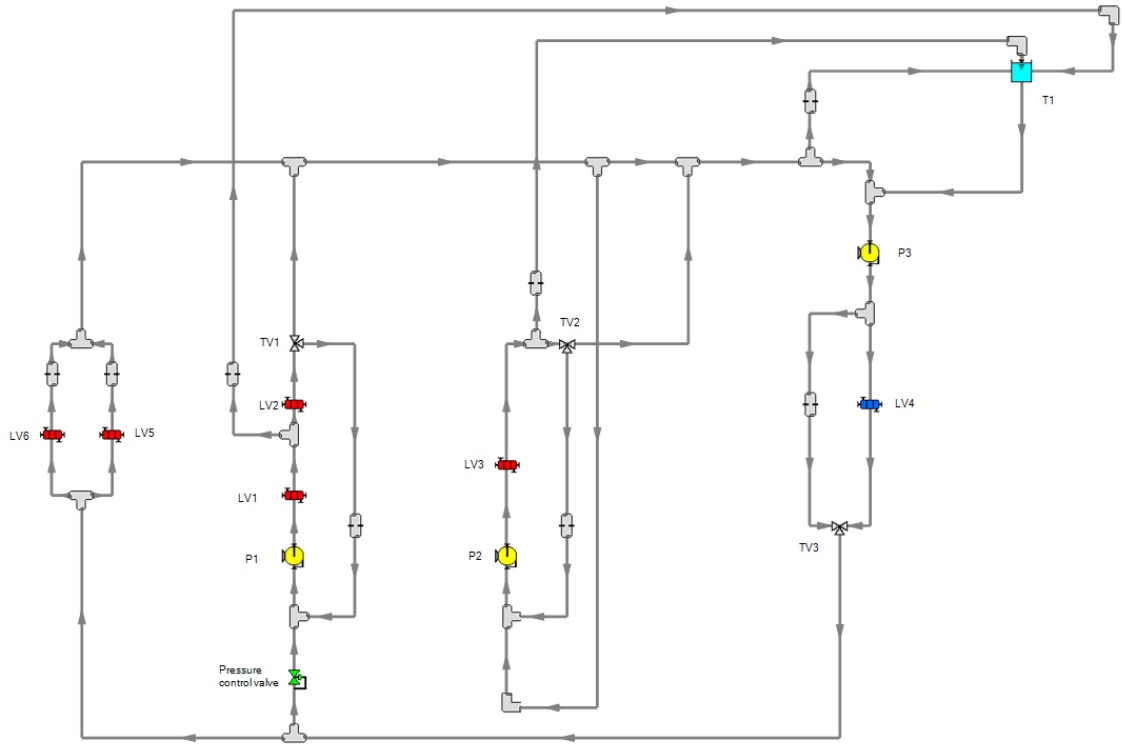

Figure 16. *Flow diagram of Case D. System is similar with Case B but "Pressure control valve" is installed before P1.*

The pressure control valve is installed before P1 and it creates a constant pressure at inlet of P1. In Case C, the flow rates decreased so the situation appears to be more similar with Case A. The results of Case D are shown in Fig. 17. In simulations, the set point of the pressure control valve is 2 bars. The set point is the pressure at the outlet of the valve.

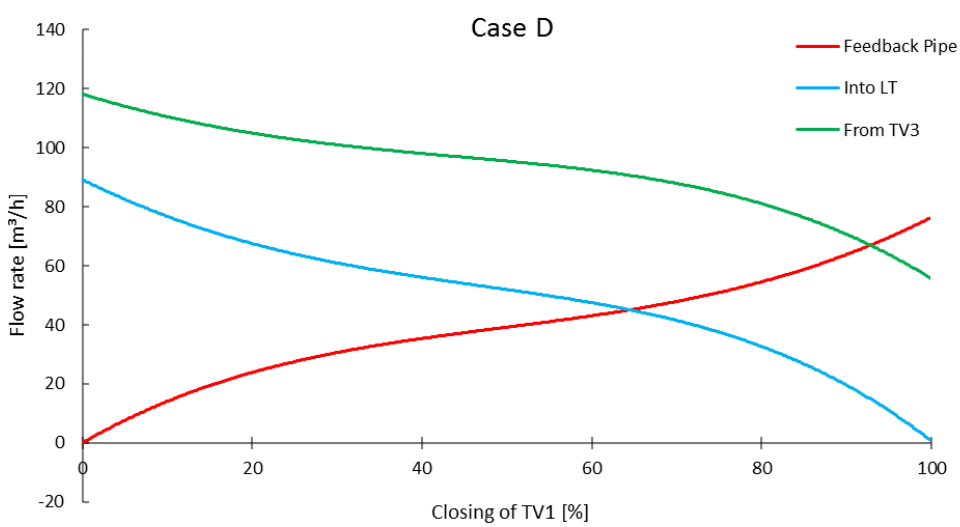

Figure 17. *Simulation results of Case D.*

Results of Case D are more similar with Case A than the Case B. The system is also working properly with every closing position of TV1. The flow rate from TV3 is approximately 60 m^3/h when TV1 is full closed. In Case A, the same flow rate is approximately 40 m^3/h.

5. CONCLUSIONS

The main objective of this study was to investigate influences of pump installations on functionality of temperature control valve. The study concentrated to analyze the flow direction in the feedback pipe of LT-cooling circuit. The feedback pipe is connected with TCV and this "pair" have an important function to recirculate heated water back to the inlet of engine LT-cooling circuit. In this study, four different cases were analyzed. The Case A was the recommended system and its results were the reference for other cases. The system of Case B was the problem scenario. The first solution proposal was named as Case C and it was a certain combination of Case A and B. Case D was also a solution proposal and its system was similar with Case B but it has a pressure control valve installed before the outlet of the feedback pipe.

The simulation results show that the positions of the pumps in the cooling water system have a clear influence on the flow direction in the feedback pipe. In Case A, the results show that the system works properly. In Case B, the new pump installation created problems to the operation of the feedback pipe of LT-cooling circuit. According to the simulation results, when the closing-% of TCV was under 40% the flow direction in the feedback pipe was opposite. The results show that the system of Case C works better than the system of Case B. The direction of the flow in the feedback pipe is correct with every closing-% of TV1. However, the same problems could arise in Case C than in Case B if the head rise of the constant pressure pump is high and the pressure drop between pump P1 and P3 is low.

The turning of the flow in the feedback pipe occurs when the pressure in the inlet of the pipe is lower than the pressure in the outlet of the pipe. In Case B, there is a pump installed before the outlet of the pipe so the pump creates high pressure in the outlet. According to simulation, the pressure could be controlled by adding a pressure control valve in the piping before the outlet of the feedback pipe (Case D). The pressure control valve prevented the turning of the flow in the feedback pipe.

The model used in simulations was a quite simplified so by making the system more realistic the results could be better. However, a too complicated system could be too difficult to model with good results. The study gave new information about how to solve the issues of Case B. The best solution was Case D where the pressure was controlled by using the pressure control valve. Another solution could be to use a better pump installation as in Case C. This study could be expanded, for example, considering the heat transfer of the system. Heat transfer could show the influences of the flow problems to the system cooling. The simulations could also be done by using another simulation software. The results of this study could be compared with another software and verify that the results of this study are valid.

REFERENCES

AFT (2015), AFT Fathom 9 Quick Start Guide, Applied Flow Technology Corporation, 106 p.

AFT (2017a), AFT: About Us, Applied Flow Technology Corporation, web page, Available (retrieved 1.12.2017): http://www.aft.com/about-us/vision-mission

AFT (2017b), Fathom Seminar Week of 22 May 2017, Applied Flow Technology Corporation, Available (retrieved 3.12.2017): http://www.prode.com/docs/AFTFathomInstructions.pdf

AMOT (2017a), 3-Way Temperature Control Valve AMOT Model G, Versions GEF, GPD and Accessories, AMOT, Available (retrieved 27.09.2017): http://www.amot.com/tenants/amot/documents/Datasheet_GEF_GPD_Temp_Control_Valve_0615_rev5.pdf

AMOT (2017b), Thermostatic Control Valves Model H, Available (retrieved 30.9.2017): http://www.amot.com/tenants/amot/documents/datasheet_h_thermostatic_valve_0311_rev1.pdf

Atkins, T. & Escudier, M. (2013), Pump, in: A Dictionary of Mechanical Engineering, Version 2014., Oxford University Press, Available (retrieved 27.11.2017): http://www.oxfordreference.com/view/10.1093/acref/9780199587438.001.0001/acref-9780199587438-e-4948?rskey=o6Gx3t&result=1

Giles, R.V., Evett, J.B. & Liu, C. (2014), Pipes in parallel, in: Schaum's outline of fluid mechanics and hydraulics, 4th ed. McGraw-Hill, New York, USA, Available (retrieved (30.11.2017): http://accessengineeringlibrary.com/browse/schaums-outline-of-fluid-mechanics-and-hydraulics-fourth-edition/c9780071831451ch09#c9780071831451ch09lev1sec04

Girdhar, P., Moniz, O. & Mackay, S. (2005), Practical Centrifugal Pumps, Newnes, Available (retrieved 27.9.2017): http://www.sciencedirect.com/science/book/9780750662734

LaNasa, P.J & Upp, E.L (2014), Fluid Flow Measurement - A Practical Guide to Accurate Flow Measurement (3rd ed.), Elsevier, 273 p, Available (retrieved 28.12.2017): https://app.knovel.com/hotlink/pdf/id:kt00U16TM1/fluid-flow-measurement/relative-density-or-specific

Lee Waite & Jerry Fine (2017), Bernoulli Equation, in: Applied Biofluid Mechanics, McGraw-Hill Professional, Access Engineering, Available (retrieved 30.11.2017): http://accessengineeringlibrary.com/browse/applied-biofluid-mechanics-second-edition/c9781259644153ch01lev1sec05

Schaschke, C. (2014), Duty Point, in: A Dictionary of Chemical Engineering, Version 2014 Oxford University Press, Available (retrieved 28.1.2018): http://www.oxfordreference.com/view/10.1093/acref/9780199651450.001.0001/acref-9780199651450-e-930

Shames, I. (1992), Mechanics of Fluids, 3rd ed., McGraw-Hill, 858 p.

White, Frank M. (2014), Reynolds number in *AccessScience*, McGraw-Hill Education, Available (retrieved 3.12.2017): https://doi.org/10.1036/1097-8542.585200

Wärtsilä (2016), Wärtsilä 34DF Product Guide, Wärtsilä Finland Oy, 232 p, Available (retrieved on 19.01.2018): https://cdn.wartsila.com/docs/default-source/product-files/engines/df-engine/product-guide-o-e-w34df.pdf?sfvrsn=6

Zhou, X., Wang, Z. & Zhang, Y. (2017), A simple method for high-precision evaluation of valve flow coefficient by computational fluid dynamics simulation, Advances in Mechanical Engineering, Vol. 9 (7), Available (retrieved 28.12.2017): http://journals.sagepub.com/doi/full/10.1177/1687814017713702

APPENDIX 1: PIPE DATA

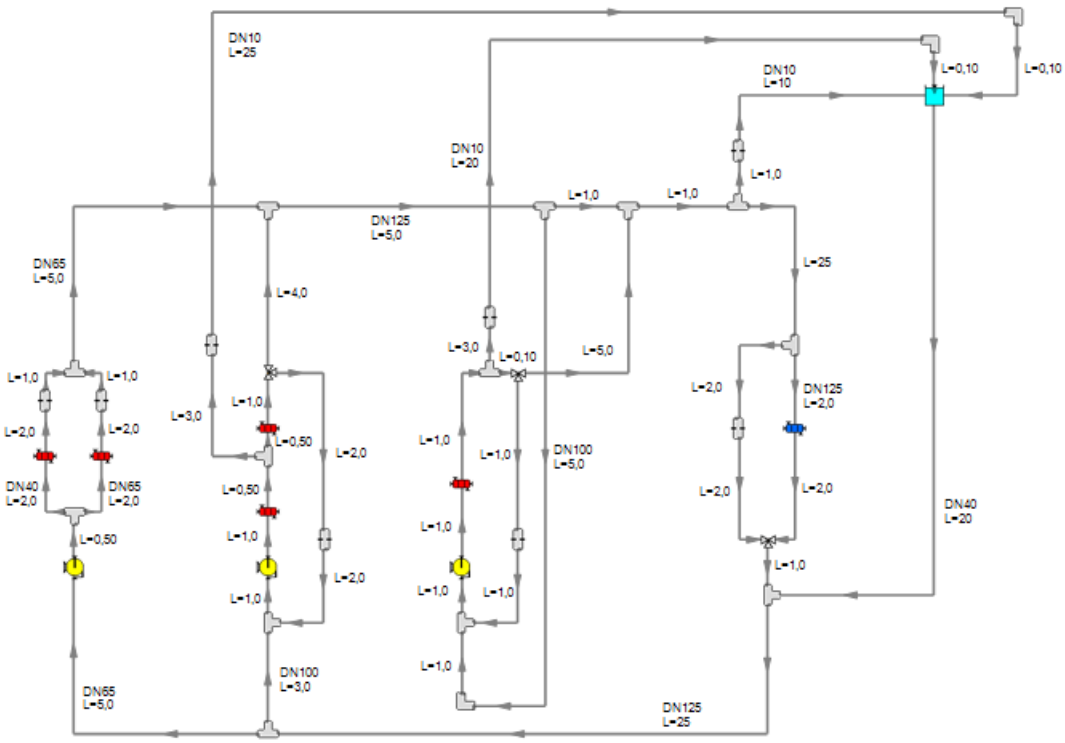

L = length [m]
DN = inner diameter of the pipe, for example: DN65 = 65 mm

APPENDIX 2: PIPE FITTINGS

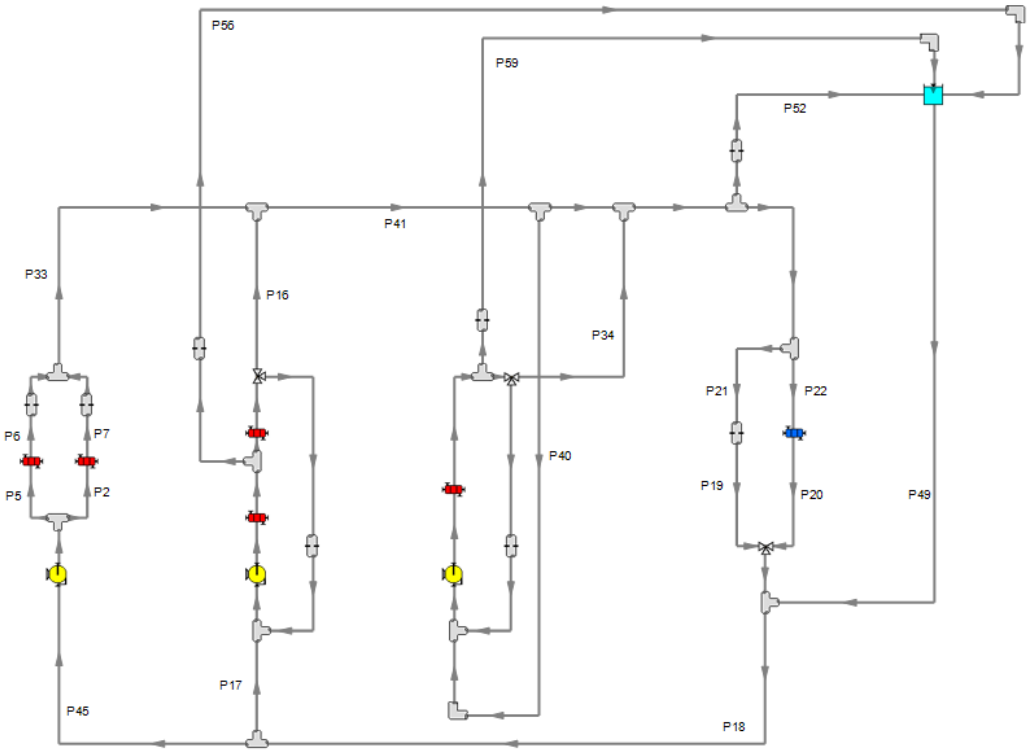

List of fittings, pipe codes are according to the figure above.

Pipe	Total K	Elbow/Bend Smooth Flanged	Valve Ball
2	1,46	4 (1,44)	1 (0,02)
5	1,68	4 (1,66)	1 (0,02)
6	1,68	4 (1,66)	1 (0,02)
7	1,46	4 (1,44)	1 (0,02)
16	1,39	4 (1,37)	1 (0,02)
17	0,7	2 (0,68)	1 (0,02)
18	2,61	8 (2,57)	2 (0,04)
19	0,66	2 (0,64)	1 (0,02)
20	0,66	2 (0,64)	1 (0,02)
21	0,66	2 (0,64)	1 (0,02)
22	0,66	2 (0,64)	1 (0,02)
33	1,46	4 (1,44)	1 (0,02)
34	1,39	4 (1,37)	1 (0,02)
40	1,39	4 (1,37)	1 (0,02)
41	1,29	4 (1,29)	
45	1,46	4 (1,44)	1 (0,02)
47	2,61	8 (2,57)	2 (0,04)
49	1,68	4 (1,66)	1 (0,02)
52	4,32	8 (4,32)	
56	4,32	8 (4,32)	
59	4,32	8 (4,32)	

APPENDIX 3: PUMP CURVES

P1 and P2

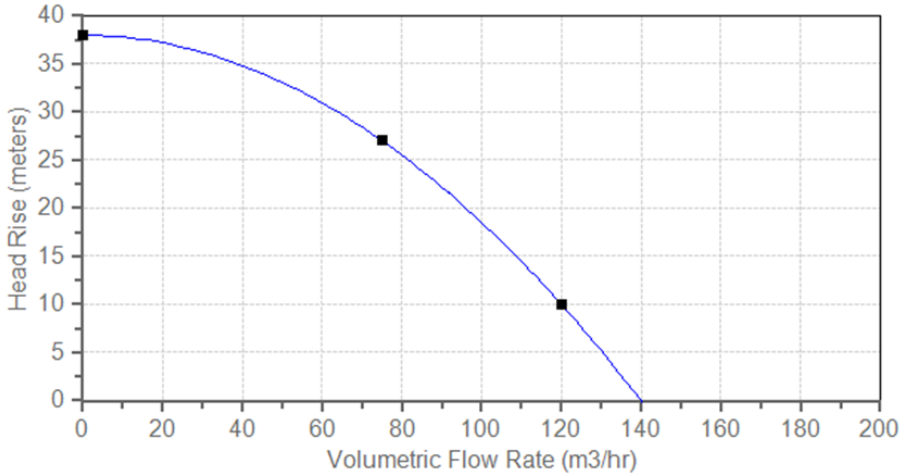

P3, Case A & C

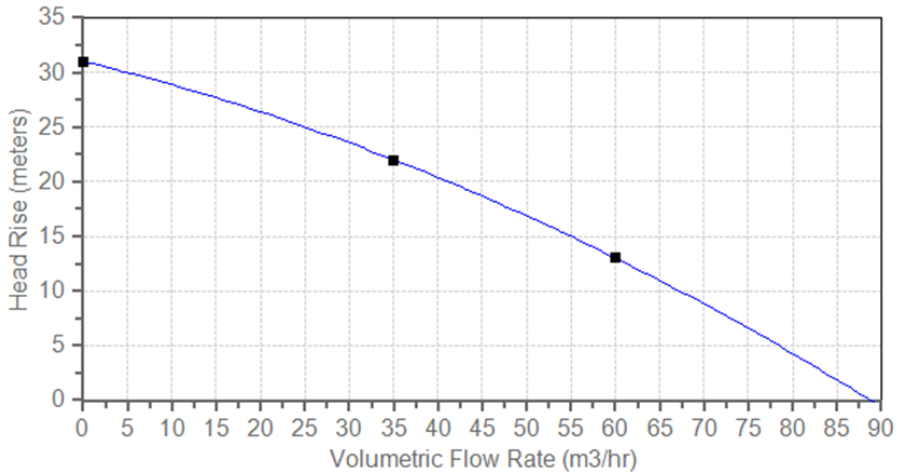

P3, Case B

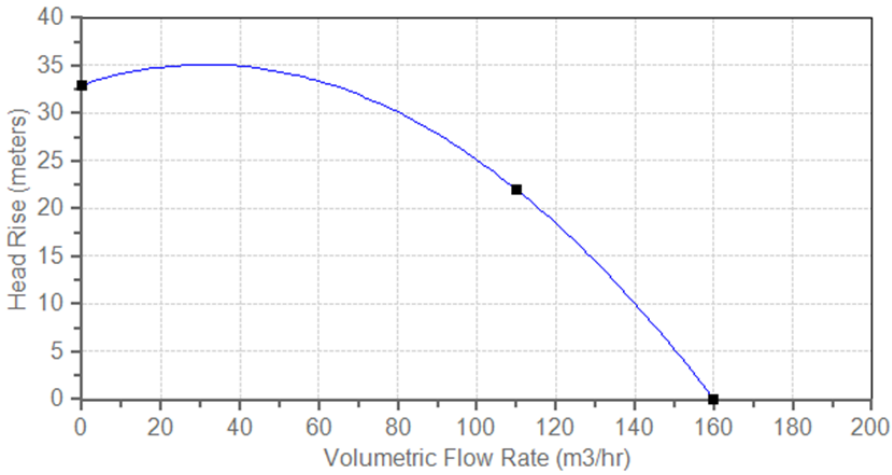

APPENDIX 4: PUMP CURVE OF P1 AND SYSTEM CURVES

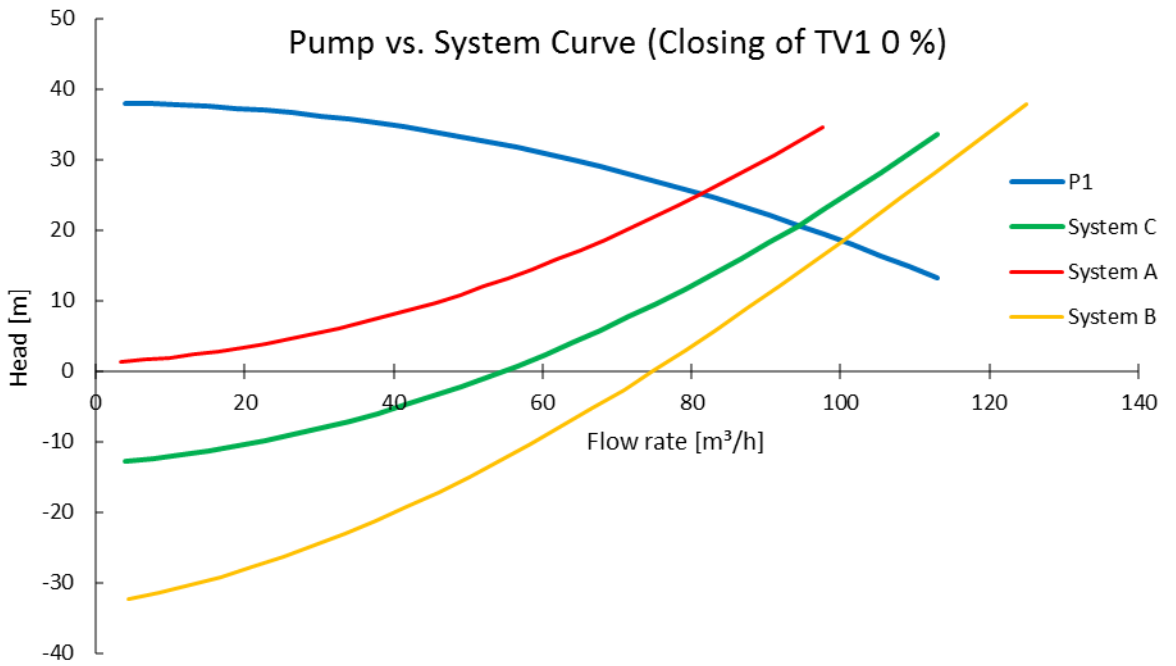

The pump curve is the same for every case. System curve changes in every case.